SALES DRAWING SALES DRAWING

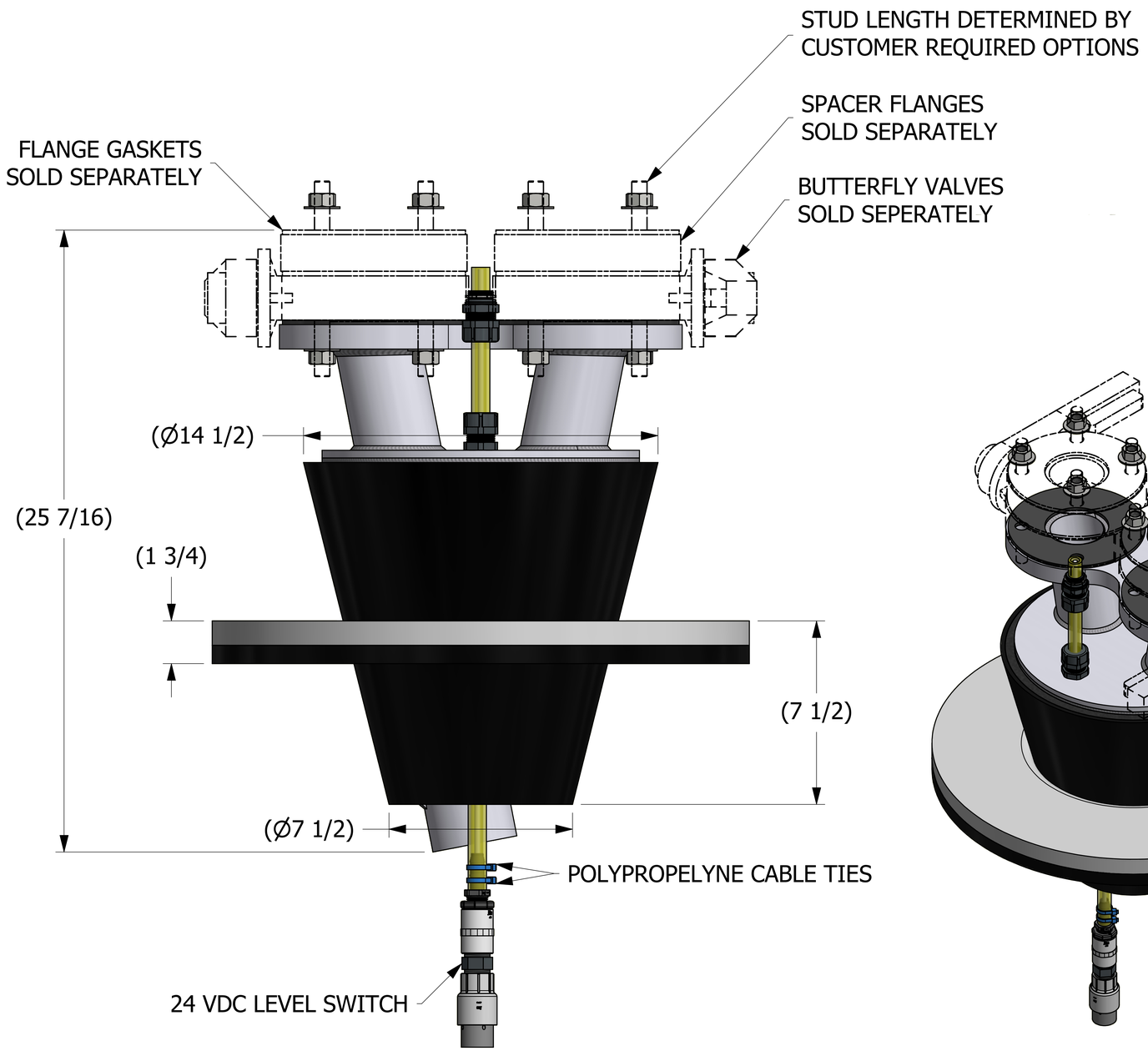

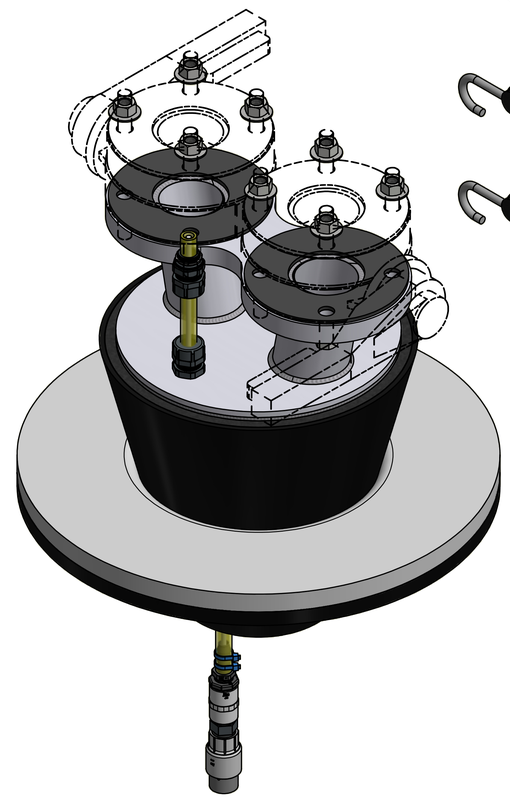

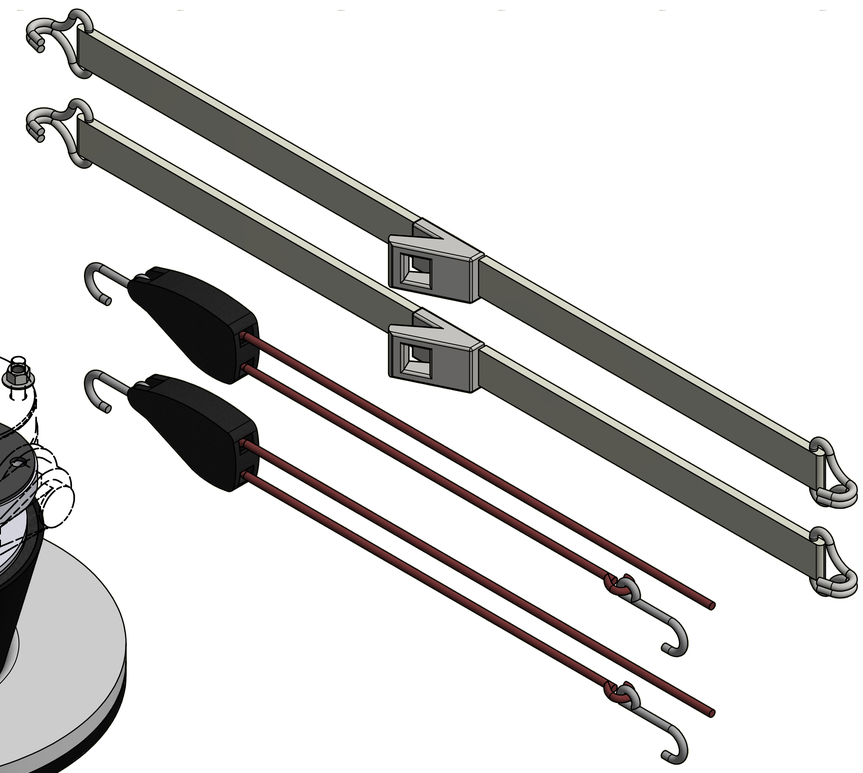

SALES DRAWING SALES DRAWING

REV	BY	DATE	DESCRIPTION
C	DGP	8-9-17	REMOVED (4) FG2315029, (2) HSSF32457 & (8) STUD588SS UPDATED NOTES & BOM
B	DGP	03-07-16	ADDED (4) FG2315029 & SHEET 2, UPDATED NOTES
A	DGP	06-03-15	RELEASED FOR PRODUCTION

UNLESS OTHERWISE SPECIFIED
DIMENSIONAL TOLERANCES
FRACTIONAL: ±1/16
X.XX: ±.03
X.XXX: ±.015
ANGULAR: ±1°
DEBURR ALL SHARP EDGES.
ALL MACHINED SURFACES TO HAVE A 125 RMS FINISH UNLESS NOTED OTHERWISE.
THIRD ANGLE PROJECTION

DRAWN BY:	DGP
CHECKED BY:	GMB
PROTOTYPE BY:	DGP
PROTOTYPE DATE:	5/18/2015
APPROVED FOR PRODUCTION BY:	DGP
PRODUCTION DATE:	6/3/2015

SALCO PRODUCTS, INC.

PART NAME: LOADING SPOUT ASSEMBLY

MATERIAL: SEE BOM

PROJECT #: C150122T | SHEET #: 1 OF 1 | SCALE: 3:4

DRAWING #: E41506 | PART #: HSCSLS1813A10

THIS PRINT, PROPERTY OF SALCO PRODUCTS INC, CONTAINS PROPRIETARY INFORMATION AND MUST NOT BE COPIED, REPRODUCED, OR USED DETRIMENTALLY TO OUR INTEREST.